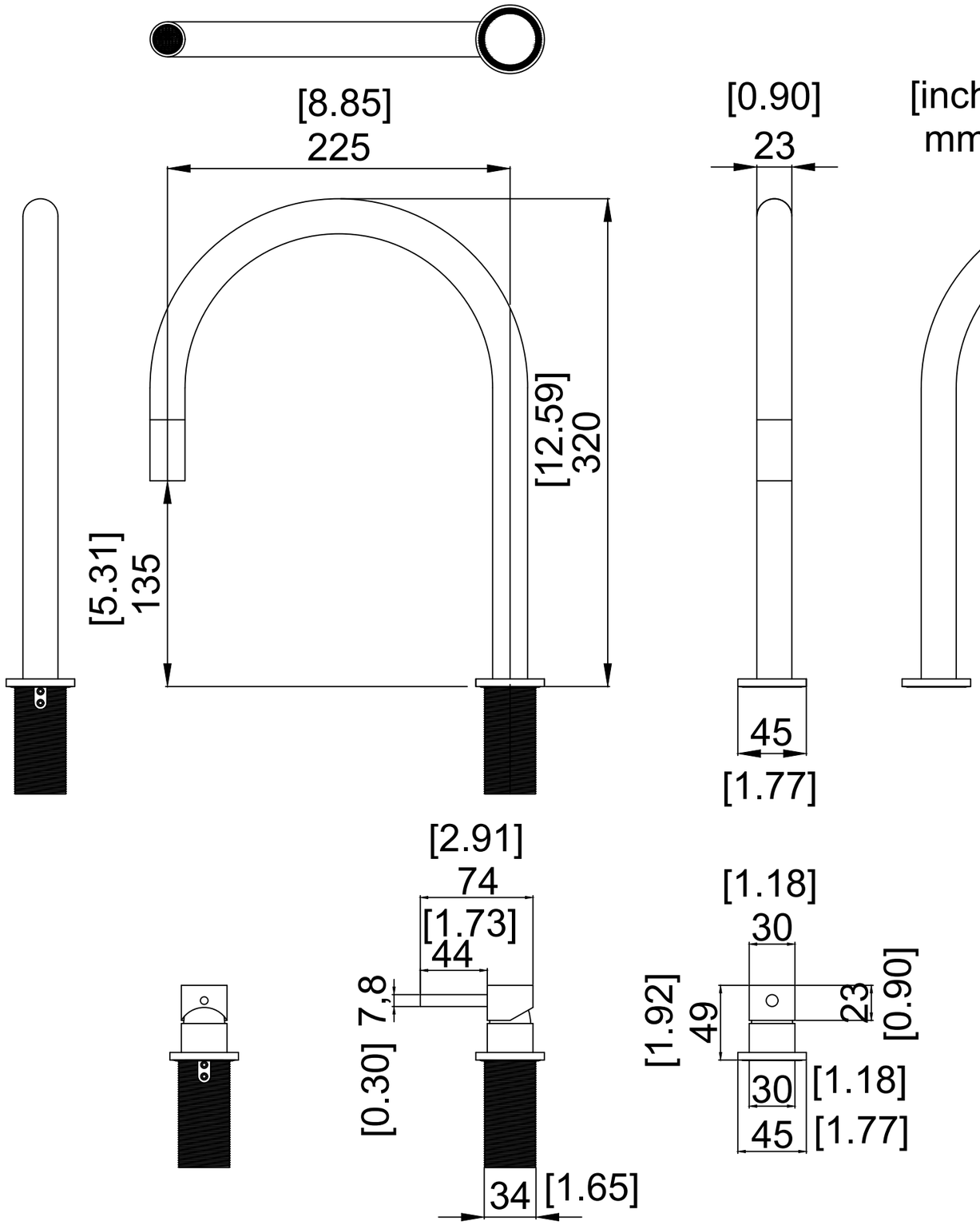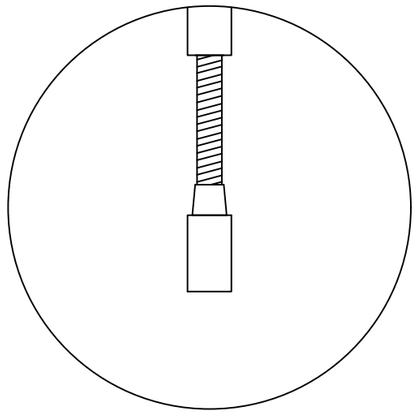
[8.85]
225
[0.90]
23
[inch]
mm
[12.59]
320
[5.31]
135
45
[1.77]
[2.91]
74
[1.73]
44
7,8
[0.30]
34
[1.65]
[1.18]
30
[1.92]
49
23
[0.90]
30
[1.18]
45
[1.77]