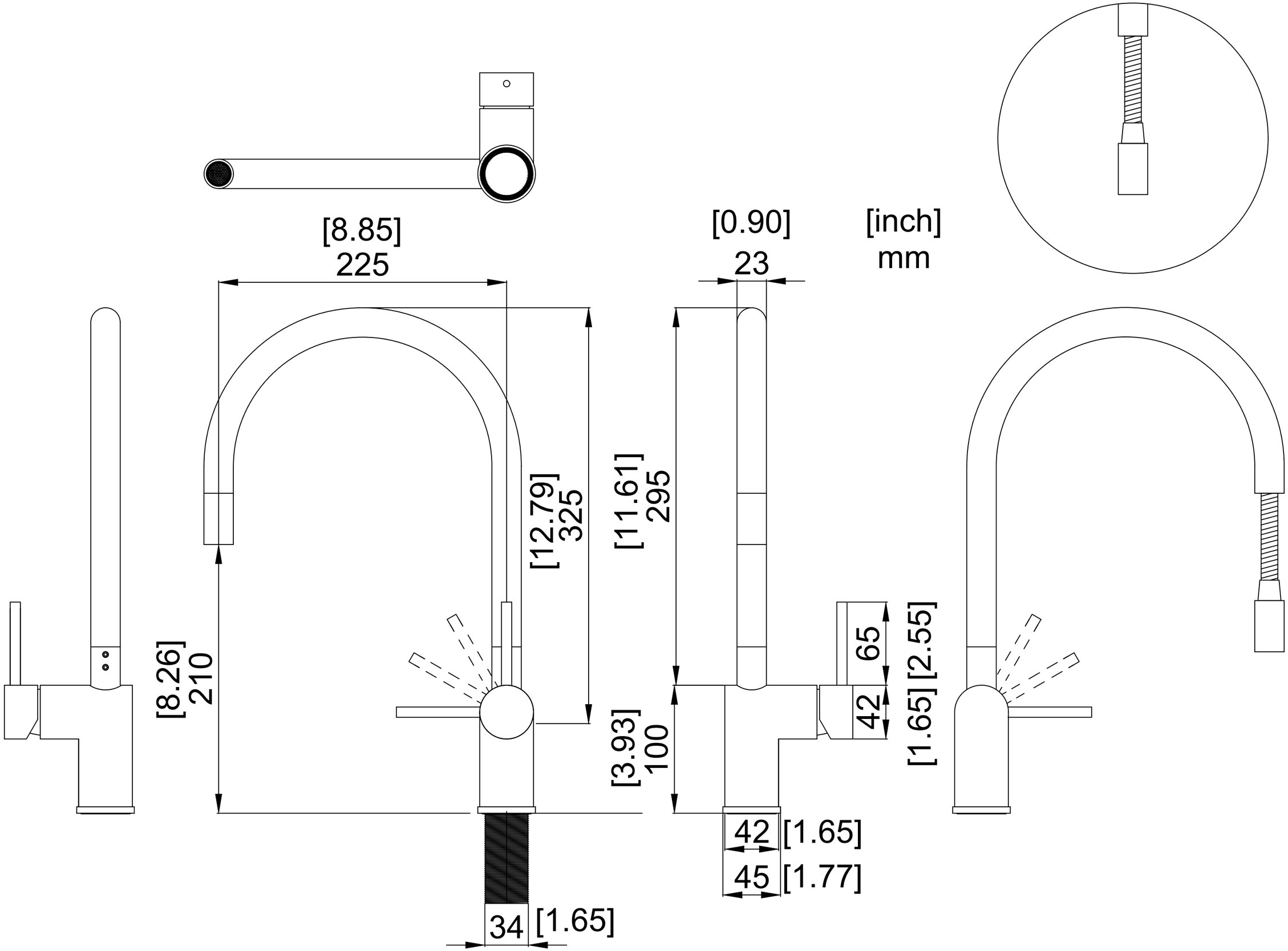
[8.85]
225
[0.90]
23
[inch]
mm
[12.79]
325
[11.61]
295
[8.26]
210
65
42
[2.55]
[1.65]
[3.93]
100
42 [1.65]
45 [1.77]
34 [1.65]