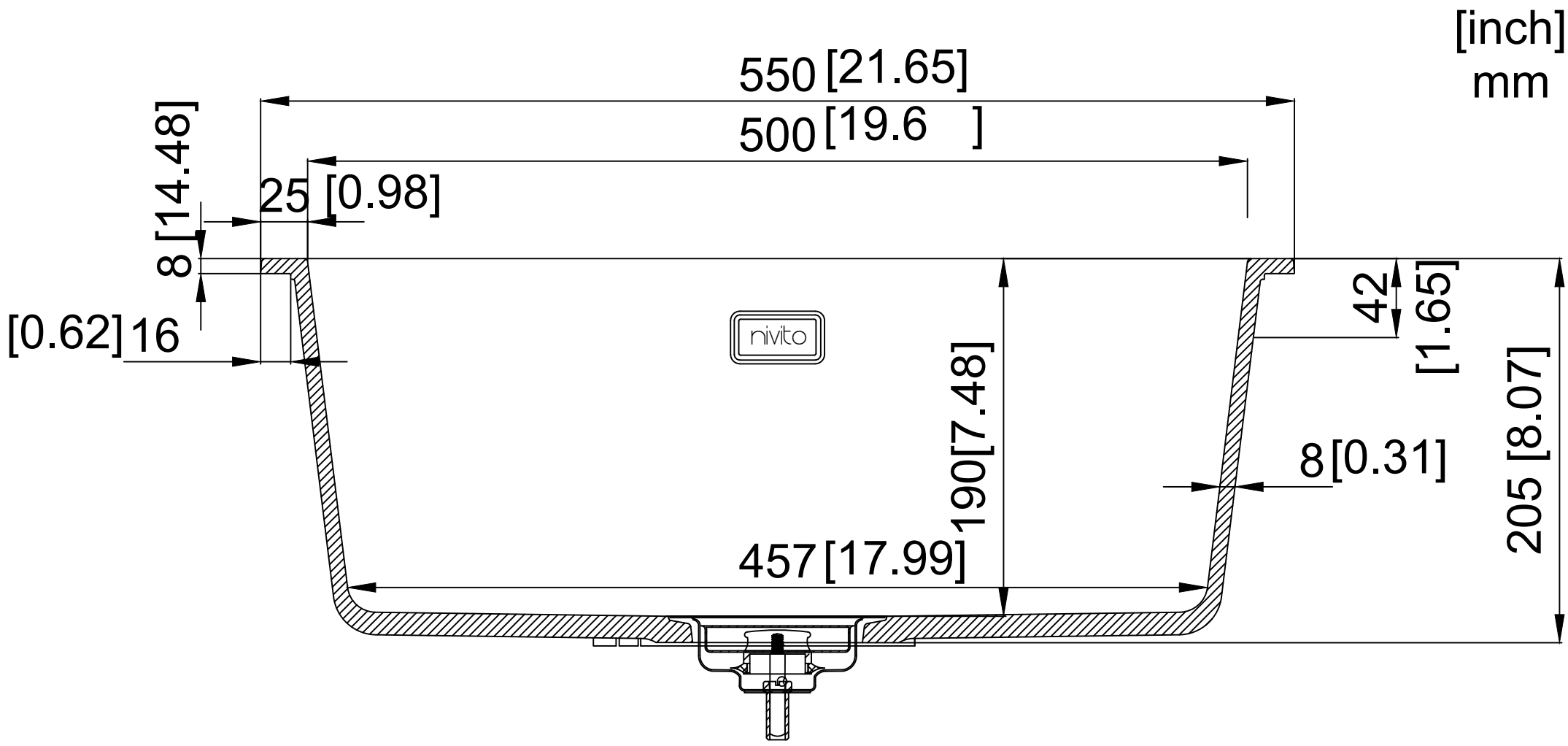
[inch]
mm
550 [21.65]
500 [19.6]
25 [0.98]
8 [14.48]
[0.62] 16
nivito
42 [1.65]
190 [7.48]
8 [0.31]
205 [8.07]
457 [17.99]

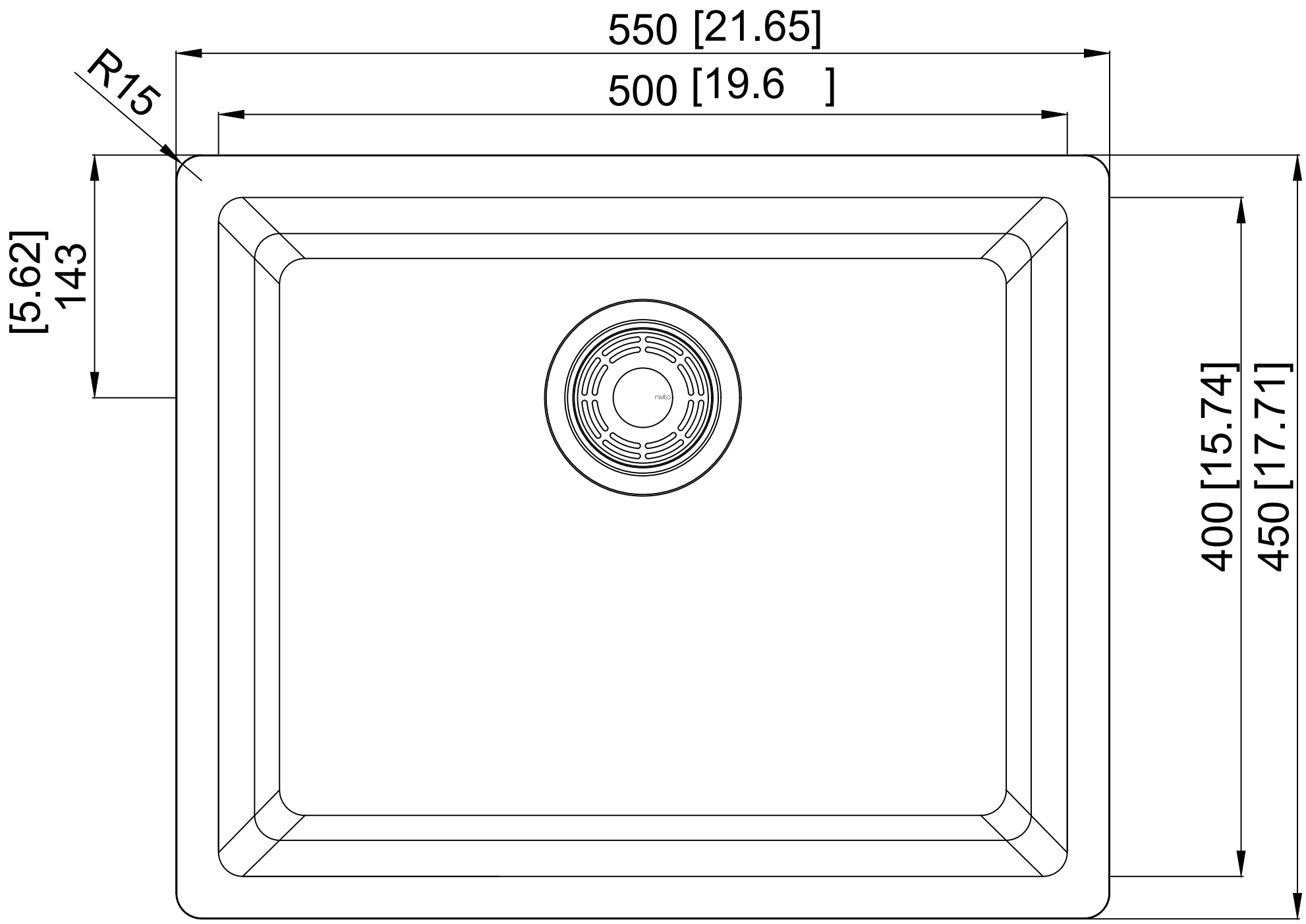
550 [21.65]
500 [19.6]
R15
[5.62]
143
400 [15.74]
450 [17.71]